NEW ENGLAND ENVIRONMENTAL SERVICES
Wetland Consulting Specialists Since 1983

March 31, 2020

Mr. Patrick Hegge
Environmental Planner
Town of Old Saybrook
302 Main Street
Old Saybrook, CT 06475-1741

Re: Lycurgus, LLC
97 Old Middlesex Turnpike
Old Saybrook, Connecticut

Dear Mr. Hegge:

On March 19, 2020, I evaluated the wetlands at 97 Old Middlesex Turnpike, Old Saybrook, CT. I previously delineated the wetland boundary on the land. The wetland is lightly wooded.

The soil type in the wetland is Natchaug. Natchaug is a very deep, very poorly drained soil formed in herbaceous organic materials overlying loamy deposits. The depth of the organic soil material (muck) is 16” to 51” deep.

The vegetation in the wetlands includes Red Maple, Speckled Alder, Winterberry, Arrowwood, Highbush Blueberry, Pepperbush, Silky Dogwood, Phragmites, Tussock Sedge, Sensitive Fern, Marsh Fern and Skunk Cabbage.

The wetland has a high function and value for groundwater recharge, flood storage, pollutant attenuation and sediment trapping. The wildlife habitat value is moderate due to the surrounding land use (railroad tracks, road and house). No vernal pools were found in the wetland within 100 feet of the subject land.

The vegetation species occurring in the uplands adjacent to the wetlands include two Red Oaks, one Black Cherry and four Cottonwood. The exotic invasive species include Multiflora Rose, Japanese Barberry, Morrow’s Honeysuckle, Japanese Honeysuckle, numerous Tree-of-Heaven, Asiatic Bittersweet and very abundant Mugwort. The upland area adjacent to the wetlands is dominated by exotic invasive plants.

107 SHORE DRIVE, LYME, CONNECTICUT 06371
richsnarski@gmail.com • 860-918-1970 • www.richsnarski.com

The proposal is to construct 14 storage units, septic system and bioretention basin on the 1.96 acre site. The site presently contains three houses. The rain leaders from the storage units will be discharged into the bioretention basin. The rain garden is proposed 5 feet from the wetland boundary in an area which is dominated by the exotic invasive sapling Tree-of-Heaven. The proposed gravel drive occurs 43 feet from the wetlands at its closest point. This area is a dense stand of the exotic invasive plant Mugwort. The closest storage unit is 70 feet from the wetlands. No native trees or shrubs are proposed to be removed within the 100 foot wetland regulated area.

I believe the proposed storage unit project will not have a significant impact on the wetlands function and values.

If you have any questions, feel free to contact me.

Respectively Submitted,

New England Environmental Services

R. Richard Snarski
Registered Professional Soil Scientist
Professional Wetlands Scientist #1391

RRS/srh

DATE	REVISION	CK.
06-12-19	PROPOSED BUILDING AND DRIVE ADDED	
02-20-20	PROPOSED LEACHING SYSTEMS AND BIORETENTION SYSTEM ADDED	
03-31-20	SOIL TESTING RESULTS ADDED	

TOWN OF OLD SAYBROOK
ZONING COMPLIANCE CHART – I1 DISTRICT

ZONING REGULATION	SECTION	REQUIRED BY REGULATION	EXISTING	PROPOSED
MIN. LOT AREA (PUBLIC)	24.3.1 A	40,000 SF	85,429 SF	85,429 SF
MINIMUM DIMENSION OF A SQUARE	24.3.2 A	150 FT	150'X150'	150'X150'
MINIMUM FRONTAGE	24.3.3	50 FT	481.86'	481.86'
MINIMUM LOT WIDTH @ BUILDING LINE	24.3.4	NONE	–	–
MAXIMUM NUMBER OF STORIES	24.4.1	2 1/2	2 1/2	2 1/2
MAXIMUM HEIGHT	24.4.2	50 FT	27 FT	<50 FT
BUILDING SETBACKS:	24.5			
STREET LINE	24.5.1	50'	18.6'	18.6'
REAR LINE	24.5.2	20'	90.7'	90.7'
OTHER LINE	24.5.3	20'	(E)29.8" (W)4.1'	(E)29.8" (W)4.1'
PROJECTION INTO SETBACK AREA	24.6.1	5'	N/A	N/A
MAXIMUM GROSS FLOOR AREA	24.5.4	80%	5,144 SF (6.0%)	18,494 SF (21.6%)
MAXIMUM BUILDING/STRUCTURE COVERAGE	24.5.4	40%	4,689 SF (5.5%)	18,039 SF (21.1%)

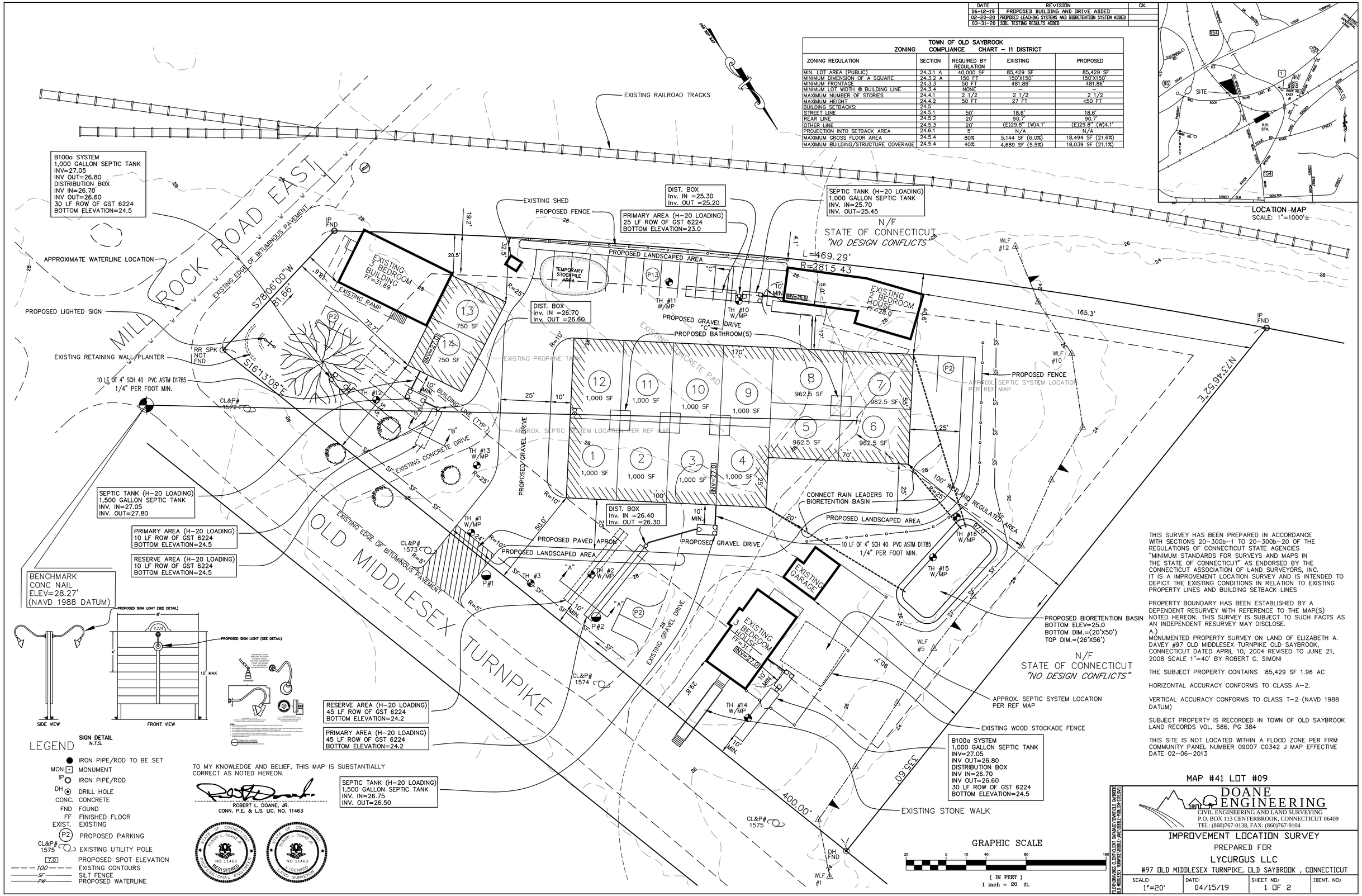

LOCATION MAP
SCALE: 1"=1000'±

THIS SURVEY HAS BEEN PREPARED IN ACCORDANCE WITH SECTIONS 20–300b–1 TO 20–300b–20 OF THE REGULATIONS OF CONNECTICUT STATE AGENCIES "MINIMUM STANDARDS FOR SURVEYS AND MAPS IN THE STATE OF CONNECTICUT" AS ENDORSED BY THE CONNECTICUT ASSOCIATION OF LAND SURVEYORS, INC. IT IS A IMPROVEMENT LOCATION SURVEY AND IS INTENDED TO DEPICT THE EXISTING CONDITIONS IN RELATION TO EXISTING PROPERTY LINES AND BUILDING SETBACK LINES

PROPERTY BOUNDARY HAS BEEN ESTABLISHED BY A DEPENDENT RESURVEY WITH REFERENCE TO THE MAP(S) NOTED HEREON. THIS SURVEY IS SUBJECT TO SUCH FACTS AS AN INDEPENDENT RESURVEY MAY DISCLOSE.
A.) MONUMENTED PROPERTY SURVEY ON LAND OF ELIZABETH A. DAVEY #97 OLD MIDDLESEX TURNPIKE OLD SAYBROOK, CONNECTICUT DATED APRIL 10, 2004 REVISED TO JUNE 21, 2008 SCALE 1"=40' BY ROBERT C. SIMONI

THE SUBJECT PROPERTY CONTAINS 85,429 SF 1.96 AC

HORIZONTAL ACCURACY CONFORMS TO CLASS A–2.

VERTICAL ACCURACY CONFORMS TO CLASS T–2 (NAVD 1988 DATUM)

SUBJECT PROPERTY IS RECORDED IN TOWN OF OLD SAYBROOK LAND RECORDS VOL. 586, PG 384

THIS SITE IS NOT LOCATED WITHIN A FLOOD ZONE PER FIRM COMMUNITY PANEL NUMBER 09007 C0342 J MAP EFFECTIVE DATE 02–06–2013

LEGEND

- IRON PIPE/ROD TO BE SET
- MON — MONUMENT
- IP — IRON PIPE/ROD
- DH — DRILL HOLE
- CONC. — CONCRETE
- FND — FOUND
- FF — FINISHED FLOOR
- EXIST. — EXISTING
- (P2) — PROPOSED PARKING
- CL&P# 1575 — EXISTING UTILITY POLE
- 7.0 — PROPOSED SPOT ELEVATION
- 100 — EXISTING CONTOURS
- SF — SILT FENCE
- PW — PROPOSED WATERLINE

TO MY KNOWLEDGE AND BELIEF, THIS MAP IS SUBSTANTIALLY CORRECT AS NOTED HEREON.

ROBERT L. DOANE, JR.
CONN. P.E. & L.S. LIC. NO. 11463

STATE OF CONNECTICUT ROBERT L. DOANE JR. NO. 11463 REGISTERED PROFESSIONAL ENGINEER

STATE OF CONNECTICUT ROBERT L. DOANE JR. NO. 11463 LICENSED LAND SURVEYOR

MAP #41 LOT #09

DOANE ENGINEERING
CIVIL ENGINEERING AND LAND SURVEYING
P.O. BOX 113 CENTERBROOK, CONNECTICUT 06409
TEL: (860)767-0138, FAX: (860)767-9104

IMPROVEMENT LOCATION SURVEY

PREPARED FOR

LYCURGUS LLC

#97 OLD MIDDLESEX TURNPIKE, OLD SAYBROOK , CONNECTICUT

SCALE:	DATE:	SHEET NO.:	IDENT. NO.:
1"=20'	04/15/19	1 OF 2	

I:\LEA\DRAWINGS CLIENT\CLIENT MAINAMES(TOWN)OLD SAYBROOK\41 WHITE\ DAVEY\DWG\DWG\ DWG\DWG\ PROJECT\ PROJECT\ PROJECT\ PROJECT

DATE	REVISION	CK.
06-12-19	PROPOSED BUILDING AND DRIVE ADDED	
02-20-20	PROPOSED LEACHING SYSTEMS AND BIORETENTION SYSTEM ADDED	
03-31-20	SOIL TESTING RESULTS ADDED	

CONSTRUCTION SEQUENCE
(SANITARY SYSTEM)

1. NOTIFY TOWN HEALTH DEPARTMENT AND THE ENGINEER 48 HOURS PRIOR TO THE BEGINNING OF CONSTRUCTION. NO PORTION OF THE SYSTEM WILL BE COVERED WITHOUT INSPECTION AND APPROVAL BY THE ENGINEER OR THE SANITARIAN.
2. PLACE SYNTHETIC BARRIER AS SHOWN ON THE DRAWING AND IN THE DETAIL.
3. REMOVE ALL TREES, STUMPS AND DELETERIOUS MATERIAL FROM SYSTEM AREA.
4. STOCKPILE TOPSOIL FOR REUSE.
   A. DO NOT STOCKPILE TOPSOIL IN SANITARY SYSTEM AREA.
   B. DO NOT REMOVE SUBSOIL.
5. ENGINEER/LAND SURVEYOR SHALL FIELD STAKE THE PROPOSED SYSTEM PRIOR TO INSTALLATION.
6. INSTALL SEPTIC SYSTEM AS SHOWN.
   A. IF SOIL CONDITIONS OTHER THAN THOSE SHOWN IN THE SOIL LOGS ARE ENCOUNTERED DURING THE INSTALLATION OF THE SANITARY SYSTEM, THE DESIGN ENGINEER OR THE SANITARIAN SHALL BE NOTIFIED AND THE WORK WILL BE HALTED PENDING REVIEW OF THOSE CONDITIONS. IF NECESSARY THE SANITARY SYSTEM SHALL BE REVISED.
   B. A MINIMUM OF 4 FEET MUST BE MAINTAINED BETWEEN THE BOTTOM OF THE SYSTEM AND LEDGE. A MINIMUM OF 1.5 FEET MUST BE MAINTAINED BETWEEN THE BOTTOM OF THE SYSTEM AND SEASONAL HIGH GROUNDWATER.
7. DO NOT BACKFILL ANY PORTION OF THE SANITARY SYSTEM UNTIL INSPECTED BY THE SANITARIAN AND UNTIL A "RECORD" SURVEY HAS BEEN COMPLETED.
8. REPLACE TOPSOIL, GRADE, SEED AND MULCH ALL DISTURBED AREAS.
9. MAINTAIN SYNTHETIC FILTER BARRIER UNTIL ALL DISTURBED AREAS ARE STABILIZED.

SANITARY SYSTEM NOTES:

1. NO LARGE CAPACITY TUBS (> 100 GALLON CAPACITY) ARE PLANNED AND WILL NOT BE PERMITTED IN THE PROPOSED RESIDENCE.
2. NO GARBAGE GRINDER INSTALLATION IS PLANNED FOR THE PROPOSED RESIDENCE. SHOULD A GARBAGE GRINDER BE INSTALLED THE PROPOSED SEPTIC TANK SHALL BE INCREASED TO THE NEXT LARGER SIZE.
3. WATER SUPPLY SHALL BE BY PUBLIC WATER
4. ALL SOLID PIPING AFTER THE SEPTIC TANK TO BE 4" PVC ASTM D 3034, SDR 35.
5. FILTER FABRIC SHALL BE SELECTED FROM APPENDIX C OF THE CONNECTICUT PUBLIC HEALTH CODE REVISED TO JAN. 15, 2015:
6. NO DEVIATION FROM THIS PLAN WILL BE ALLOWED WITHOUT THE APPROVAL OF THE ENGINEER AND SANITARIAN.
7. SEPTIC TANK CONSTRUCTION JOINTS SHALL BE SEALED WITH ASPHALT CEMENT. ALL PIPE CONNECTIONS TO THE SEPTIC TANK AND DISTRIBUTION BOXES SHALL BE SEALED WITH A POLYETHYLENE GASKET ("POLY-LOK" OR APPROVED EQUAL)
8. SEPTIC TANK BAFFLES SHALL CONFORM TO SECTION VA-1 TECHNICAL STANDARDS OF THE STATE HEALTH CODE.
9. SEPTIC TANK SHALL BE TWO COMPARTMENT TANK WITH HEAVY DUTY STEEL HANDLES FOR MANHOLE ACCESS COVERS AND GAS BAFFLES INSTALLED ON OUTLET PIPING. SEPTIC TANK TO BE EQUIPPED WITH AN APPROVED NON-BY-PASS EFFLUENT FILTER AT THE OUTLET SELECTED FROM APPENDIX B OF THE CONNECTICUT PUBLIC HEALTH CODE REVISED TO JAN. 15, 2015
10. STONE AGGREGATE MEANS BROKEN STONE, CRUSHED STONE, OR SCREENED GRAVEL MEETING DEPARTMENT OF TRANSPORTATION FORM 814A SPECIFICATION M.01.01 FOR NO. 4 STONE (AS SHOWN BELOW OR LATEST SPECIFICATION). STONE AGGREGATE (PREVIOUSLY "ONE-INCH BROKEN STONE") SHALL BE FREE OF SILT, DIRT OR DEBRIS AND SHALL SHOW A LOSS OF ABRASION OF NOT MORE THAN 50 PERCENT USING AASHTO METHOD T-96.

SIEVE SIZE	PERCENT PASSING (BY WEIGHT)
2 INCH	100
1.5 INCH	90-100
1 INCH	20-55
3/4 INCH	0-10
3/8 INCH	0-5

SANITARY SYSTEM NOTES:

1. NO LARGE CAPACITY TUBS (> 100 GALLON CAPACITY) ARE PLANNED AND WILL NOT BE PERMITTED IN THE PROPOSED RESIDENCE.
2. NO GARBAGE GRINDER INSTALLATION IS PLANNED FOR THE PROPOSED RESIDENCE. SHOULD A GARBAGE GRINDER BE INSTALLED THE PROPOSED SEPTIC TANK SHALL BE INCREASED TO THE NEXT LARGER SIZE.
3. WATER SUPPLY SHALL BE BY INDIVIDUAL WELL
4. ALL SOLID PIPING AFTER THE SEPTIC TANK TO BE 4" PVC ASTM D 3034, SDR 35.
5. FILTER FABRIC SHALL BE SELECTED FROM THE FOLLOWING TABLE:

APPROVED FILTER FABRICS FOR COVERING STONE AGGREGATE

MANUFACTURER	DESIGNATION NUMBER
AMERICAN ENGINEERING FABRICS	AEF-480
BRADLEY INDUSTRIAL TEXTILE	PHOENIX OR LIJOMA
CARTHAGE MILLS	M35
CULTEC *	410
DUPONT	SF20
ENGINEERED SYNTHETIC PRODUCTS	TNS R020
L&M SUPPLY COMPANY	L&M 231
MIRAFI	65304 (4' WIDE), 65303 (3' WIDE)
SKAPS INDUSTRIES	SKAPS GT 120
TERRA TEX	S01.5, P01.5
TYPAR	3151, 3201
US FABRIC INC.	US 1.5 CT

* ALSO APPROVED TO COVER TWO (2) INCH NOMINAL TIRE CHIP AGGREGATE

6. NO DEVIATION FROM THIS PLAN WILL BE ALLOWED WITHOUT THE APPROVAL OF THE ENGINEER AND SANITARIAN.
7. SEPTIC TANK CONSTRUCTION JOINTS SHALL BE SEALED WITH ASPHALT CEMENT. ALL PIPE CONNECTIONS TO THE SEPTIC TANK AND DISTRIBUTION BOXES SHALL BE SEALED WITH A POLYETHYLENE GASKET ("POLY-LOK" OR APPROVED EQUAL)
8. SEPTIC TANK BAFFLES SHALL CONFORM TO SECTION VA-1 TECHNICAL STANDARDS OF THE STATE HEALTH CODE.
9. SEPTIC TANK SHALL BE TWO COMPARTMENT TANK WITH HEAVY DUTY STEEL HANDLES FOR MANHOLE ACCESS COVERS AND GAS BAFFLES INSTALLED ON OUTLET PIPING. SEPTIC TANK TO BE EQUIPPED WITH AN APPROVED NON-BY-PASS EFFLUENT FILTER AT THE OUTLET. SEE TABLE BELOW:

APPROVED SEPTIC TANK EFFLUENT FILTERS

MANUFACTURER	MODEL
ORENCO SYSTEMS	FT0444-36 FT0854-36 FT1254-36 FT1554-36
PREMIER TECH	EFT-080
POLYLOK	PL-68, PL-122, PL-525, PL-625
RISSY PLASTICS	45 - CLIK N'STICK
THORSBY & BOWNE	SANITEE
TUF-TITE	EF-4, EF-6
ZABEL	A100 A300 A1800 A1801 A100-HIP A300-HIP A1800-HIP A1801-HIP A600-12, A600-8
ZOELLER	170-0017 170-0078 5000-0007
NORWECO	BIO-KINETIC BK2000
BIO-MICROBICS	ST 416, ST 418, ST 818 ST 838, ST 1618, ST 1638
BOWCO INDUSTRIES	EF-235
GAG-SIMTECH	STF-110, STF-110-7R STF-110-6W, STF-110-8B

10. STONE AGGREGATE MEANS BROKEN STONE, CRUSHED STONE, OR SCREENED GRAVEL MEETING DEPARTMENT OF TRANSPORTATION FORM 814A SPECIFICATION M.01.01 FOR NO. 4 STONE (AS SHOWN BELOW OR LATEST SPECIFICATION). STONE AGGREGATE (PREVIOUSLY "ONE-INCH BROKEN STONE") SHALL BE FREE OF SILT, DIRT OR DEBRIS AND SHALL SHOW A LOSS OF ABRASION OF NOT MORE THAN 50 PERCENT USING AASHTO METHOD T-96.

SIEVE SIZE	PERCENT PASSING (BY WEIGHT)
2 INCH	100
1.5 INCH	90-100
1 INCH	20-55
3/4 INCH	0-10
3/8 INCH	0-5

BIORETENTION BASIN FLOOR MIX - LOW MAINTENANCE

ERNMX # ERNMX-126
SEEDING RATE 20-40 LB PER ACRE, OR 1 LB PER 1,000 SQ FT
MIX TYPE STORM WATER MANAGEMENT FACILITY SITES
SPECIES LIST

25% REDTOP PANICGRASS, PA ECOTYPE (PANICUM RIGIDULUM (P. STIPITATUM), PA ECOTYPE)
16% VIRGINIA WILDRYE, PA ECOTYPE (ELYMUS VIRGINICUS, PA ECOTYPE)
16% ALKALIGRASS, 'FULTS' (PUCCINELLIA DISTANS, 'FULTS')
15% FOWL BLUEGRASS (POA PALUSTRIS)
10% CREEPING BENTGRASS (AGROSTIS STOLONIFERA)
10% TICKLEGRASS (ROUGH BENTGRASS), PA ECOTYPE (AGROSTIS SCABRA, PA ECOTYPE)
5% SOFT RUSH (JUNCUS EFFUSUS)
2% AUTUMN BENTGRASS, PA ECOTYPE (AGROSTIS PERENNANS, PA ECOTYPE)
1% PATH RUSH, PA ECOTYPE (JUNCUS TENUIS, PA ECOTYPE)

TOTAL: 100%

USE ERNST CONSERVATION SEEDS
COMPANY RETENTION BASIN FLOOR MIX OR EQUAL

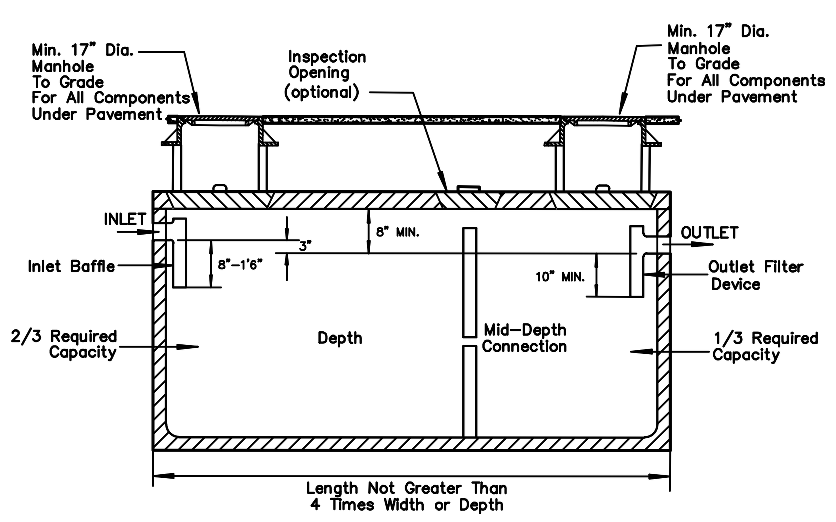

(H-20 LOADING)
TYPICAL SEPTIC TANK

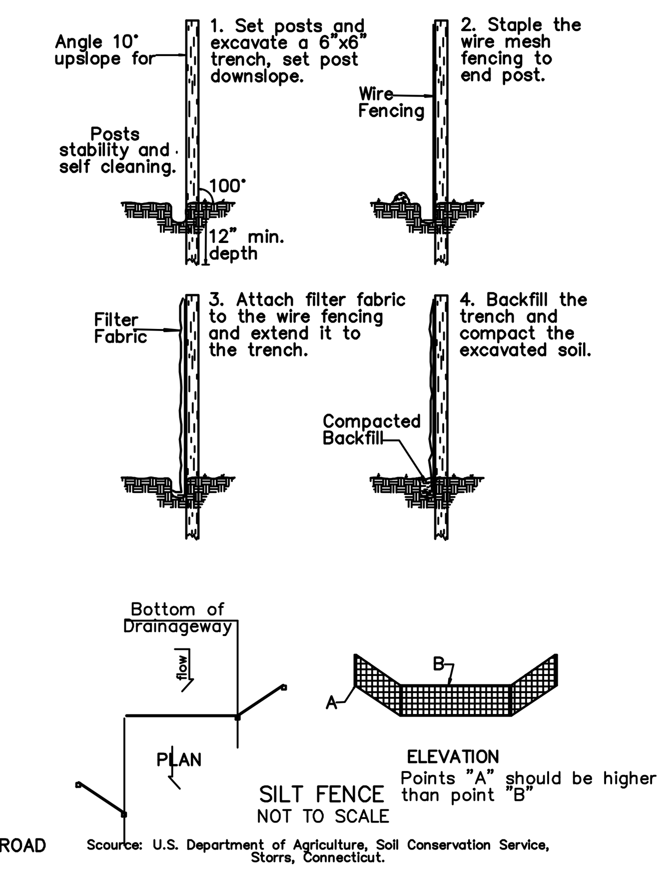

SILT FENCE
NOT TO SCALE

Source: U.S. Department of Agriculture, Soil Conservation Service, Storrs, Connecticut.

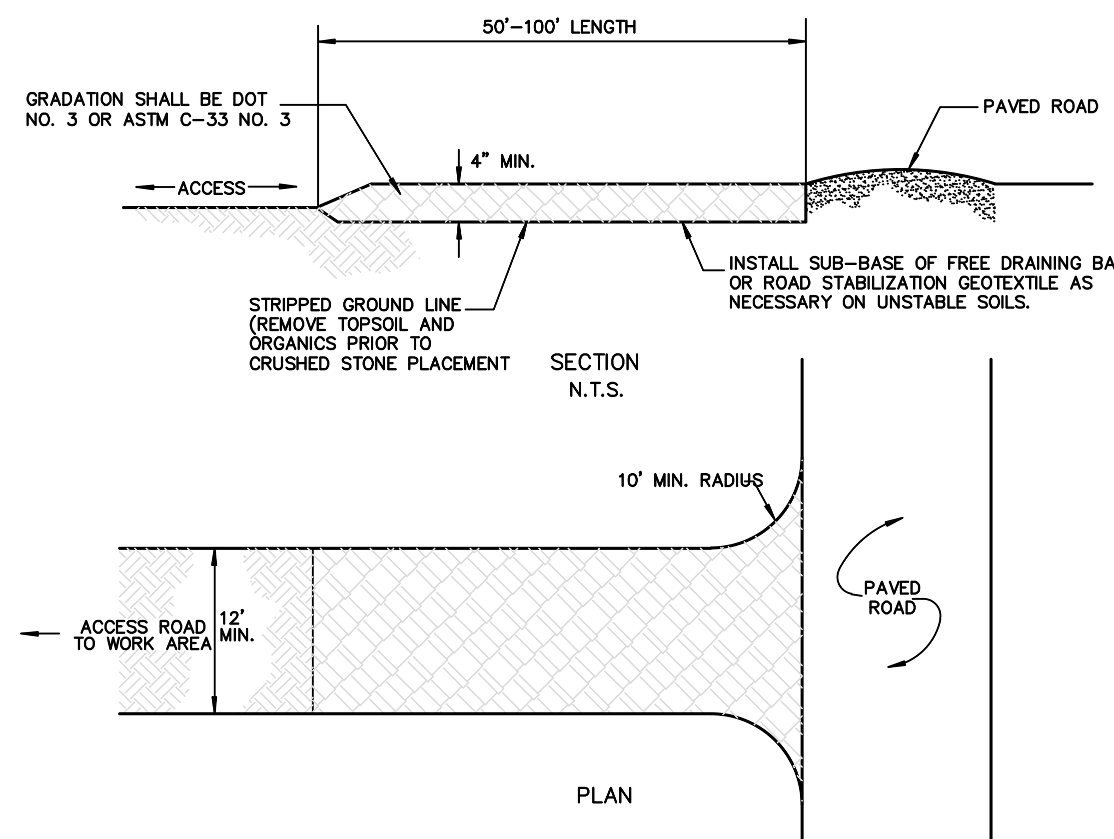

CONSTRUCTION ENTRANCE
N.T.S.

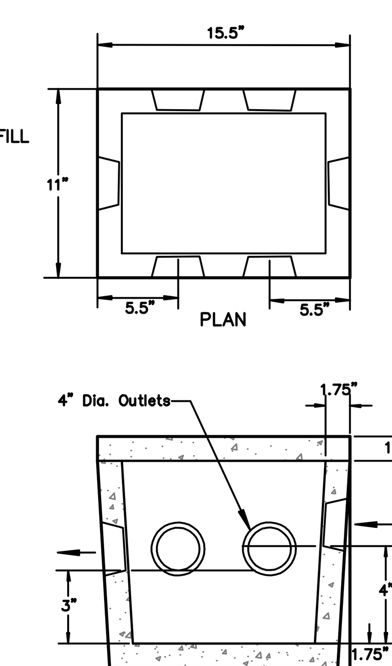

DISTRIBUTION BOX
N.T.S.

SANITARY SYSTEM DESIGN CRITERIA:

BUILDING 1:

AREA OF BUILDING = 11,850 SF
DESIGN FLOW = 11,850 SF x 0.1 GPD/SF = 1,185 GPD
PERCOLATION RATE = 3.2 MIN/IN
APPLICATION RATE = 1.5 GPD/SF
REQUIRED EFFECTIVE LEACHING AREA = 790 SF
PROVIDED 45 LF OF GST 6224
EFFECTIVE LEACHING AREA PROVIDED =
45 LF x 18.1 SF/LF = 814 SF
PROVIDE 1,500 GALLON SEPTIC TANK
PROVIDE 100 PERCENT RESERVE AREA

AVERAGE DEPTH TO RESTRICTIVE LAYER > 60 INCHES
THEREFORE MLSS NEED NOT BE CONSIDERED

BUILDING 2:

AREA OF BUILDING = 1,500 SF
DESIGN FLOW = 1,500 SF x 0.1 GPD/SF = 150 GPD
PERCOLATION RATE = 3.2 MIN/IN
APPLICATION RATE = 1.5 GPD/SF
REQUIRED EFFECTIVE LEACHING AREA = 100 SF
PROVIDED 10 LF OF GST 6224
EFFECTIVE LEACHING AREA PROVIDED =
10 LF x 18.1 SF/LF = 181 SF
PROVIDE 1,000 GALLON SEPTIC TANK
PROVIDE 100 PERCENT RESERVE AREA

AVERAGE DEPTH TO RESTRICTIVE LAYER > 60 INCHES
THEREFORE MLSS NEED NOT BE CONSIDERED

EXISTING 1 BEDROOM HOUSE
PROPOSED 2 BEDROOM SYSTEM
DESIGN PERCOLATION RATE = 1-10 MIN/INCH
REQUIRED EFFECTIVE LEACHING AREA = SIGN 375 SF
PROVIDE 25 FEET OF GST 6224
EFFECTIVE LEACHING AREA PROVIDED = 25 FEET X 18.1 SF/FT
RESERVE AREA NOT REQUIRED = TO 452 SF
PROVIDE 1000 GALLON SEPTIC TANK
MLSS NOTE
DESIGN IS BASED ON SOIL TEST CONDUCTED APPROXIMATELY 2 FEET FROM THE PROPOSED SYSTEM CONFIRMING SOIL TEST MUST BE CONDUCTED IN AREA PROPOSED SYSTEM.

B100A SANITARY SYSTEM DESIGN (SYSTEM NEED NOT BE BUILT)
EXISTING 3 BEDROOM HOUSE DESIGN PERCOLATION RATE = 1-10 MIN./INCH
REQUIRED EFFECTIVE LEACHING AREAPROVIDED = 495 SF
PROVIDE 30 FEET OF GST 6224
EFFECTIVE LEACHINGAREA PROVIDED = 30 FT X 18.1 SF/FT
RESERVE AREA NOT REQUIRED=543 SF
PROVIDE 1000 GALLON SEPTIC TANK

STORMWATER MANAGEMENT

PROVIDE STORAGE/RECHARGE FOR 1ST INCH OF RUNOFF FROM PROPOSED BUILDINGS:

TOTAL BUILDING AREA = 13,350 SF
VOLUME OF 1ST INCH = 13.350 SF x 1 FT/12 INCHES = 1,113 CF
PROVIDE A STORMWATER BIORETENTION BASIN:

PROPOSED SIZE OF BASIN = 20 FT x 50 FT x 1 FT DEEP
WITH 3:1 SLOPES
BOTTOM DIMENSIONS = 20 FT X 50 FT = 1,000 SF
TOP DIMENSIONS = 26 FT X 56 FT = 1,456 SF
VOLUME = 1,228 CF

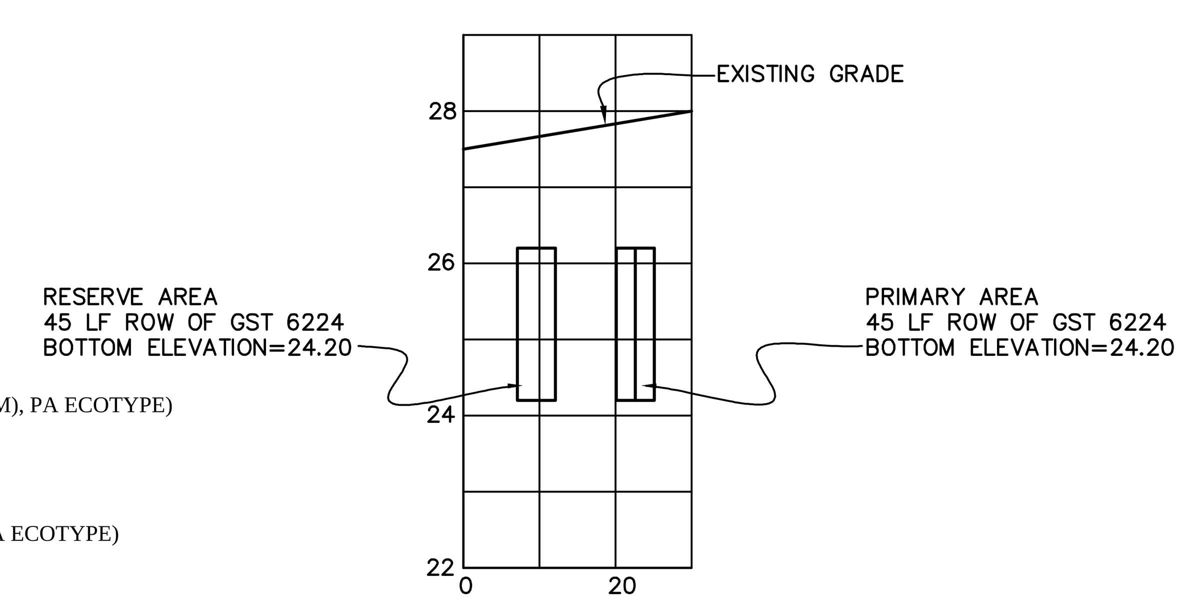

SECTION A-A
SANITARY SYSTEM X-SECTION
HORZ. SCALE: 1" = 20'
VERT. SCALE: 1" = 2'

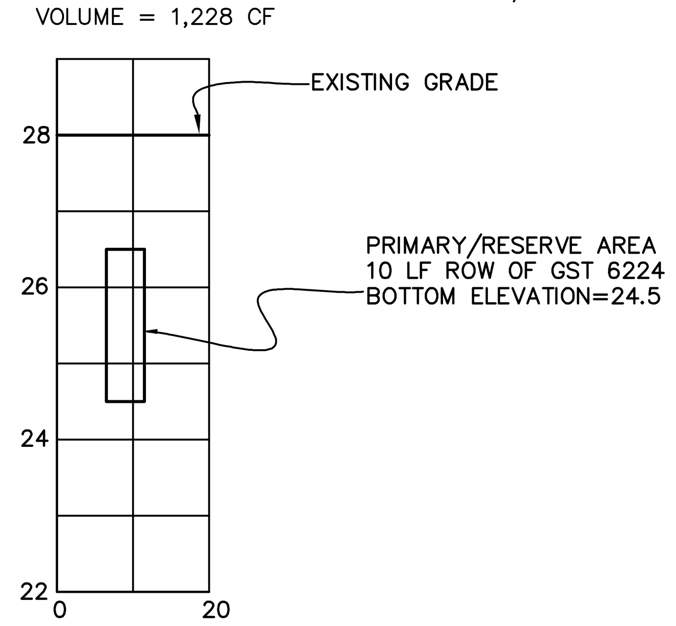

SECTION B-B
SANITARY SYSTEM X-SECTION
HORZ. SCALE: 1" = 20'
VERT. SCALE: 1" = 2'

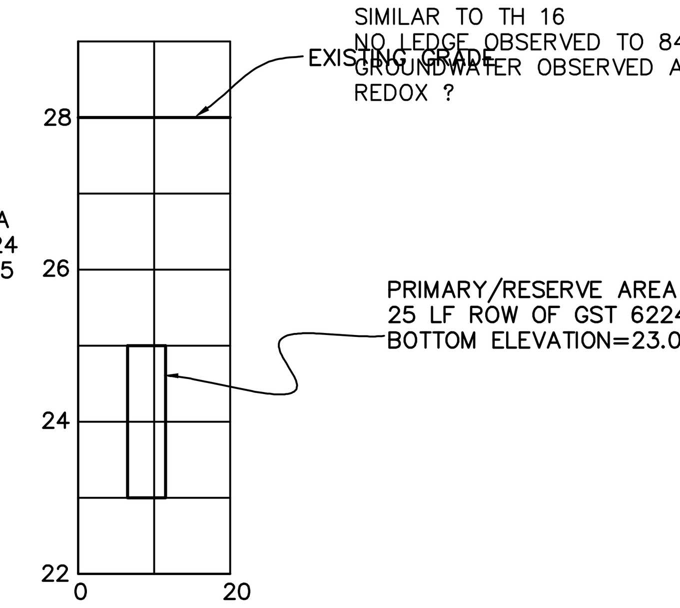

SECTION C-C
SANITARY SYSTEM X-SECTION
HORZ. SCALE: 1" = 20'
VERT. SCALE: 1" = 2'

TEST HOLE DATA
PERFORMED BY TOM METCALF
& ZACH FAIELLA, CRAHD
5/23/19

TH 1 - MP

0 - 6" TOPSOIL, GRASS, LAWN
6 - 24" YELLOW/BROWN, LOAM, YELLOW, FINE SAND
24 - 78" YELLOW/BROWN, GRAVELLY, MEDIUM SAND
NO LEDGE OBSERVED
GROUNDWATER OBSERVED AT 60"
NO MOTTLING

TH 2 - MP

0 - 6" TOPSOIL, GRASS, LAWN
6 - 12/20" YELLOW/BROWN, VERY FINE SANDY LOAM (DISTURBED)
12/20 - 84" YELLOW/BROWN, GRAVELLY, MEDIUM/COARSE SAND
84 - 102" DARK YELLOW/BROWN COARSE SAND
NO LEDGE OBSERVED
GROUNDWATER OBSERVED AT 72"
NO MOTTLING OBSERVED

TH 3

SIMILAR TO TH 2
NO LEDGE OBSERVED TO 84"
GROUNDWATER OBSERVED AT 66"
NO MOTTLING OBSERVED

TEST HOLE DATA
PERFORMED BY DOANE ENGINEERING
& CRAHD
3/16/20

TH 10 - (CONDUIT N-S @ 3' DEPTH ON WEST SIDE OF HOLE)

0 - 22" DISTURBED PAVEMENT, YELLOW/BROWN SILT, TOPSOIL
22 - 48" BROWN/YELLOW, VERY FINE, SANDY LOAM, FEW WASH STONE
48 - 104" BROWN/YELLOW, GRAVELLY, MEDIUM SAND
WASH STONE TO 6" ANGULAR ROUND
NO LEDGE OBSERVED
GROUNDWATER OBSERVED AT 78" - 1 HR
GROUNDWATER OBSERVED AT 88 - 0 HR
REDOX ?

TH 11 - (ENTER TOP 4' OF HOLE)

0 - 16" DISTURBED - SIMILAR TO TH 10
16 - 40" YELLOW/BROWN, VERY FINE, SANDY LOAM
40 - 98" YELLOW/BROWN, GRAVELLY MEDIUM SAND
WASH STONE TO 6" ANGULAR ROUND
NO LEDGE OBSERVED
GROUNDWATER OBSERVED AT 78" - 1 HR
GROUNDWATER OBSERVED AT 82" - 0 HR
REDOX ?

TH12 (DID NOT ENTER HOLE-UNCOVER/DISTURB EXISTING SEPTIC)

0 - 10" TOPSOIL
10 - 48" YELLOW/BROWN, VERY FINE, SANDY LOAM
48 - 96" YELLOW/BROWN GRAVELLY MEDIUM SAND,
WASH STONE TO 8" ANGULAR ROUND
NO LEDGE OBSERVED
GROUNDWATER OBSERVED AT 88" - 0 HR
GROUNDWATER OBSERVED AT 80" - 1 HR
REDOX ?
STOPPED EXCAVATION WHEN SEPTIC LEACHING DISTURBED

TH 13

0 - 4" TOPSOIL
4 - 30" YELLOW/BROWN FINE, SANDY LOAM
30 - 96" YELLOW/BROWN, GRAVELLY, MEDIUM/COARSE SAND,
WASH STONE TO 6" ANGULAR ROUND
* INCLUSION LIGHT BROWN/GRAY SILT AND FINE SAND
NO LEDGE OBSERVED
GROUNDWATER OBSERVED AT 74 - 0 HR
REDOX ?

TH 14

0 - 4" TOPSOIL
4 - 24" YELLOW/BROWN, VERY FINE, SANDY LOAM, LITTLE GRAVEL
24 - 194" YELLOW/BROWN, VERY GRAVELLY, MEDIUM SAND,
WASH STONE TO 6" ANGULAR ROUND
NO LEDGE OBSERVED
GROUNDWATER OBSERVED AT 74" - 0 HR
REDOX

TH 15

0 - 48" FILL/DISTURBED BROKEN CONCRETE SLAB
48 - 88" YELLOW/BROWN, GRAVELLY FINE/MEDIUM SAND,
WASH STONE TO 6" ANGULAR ROUND
NO LEDGE OBSERVED
GROUNDWATER OBSERVED AT 68 - 0 HR
REDOX ?

TH 16

SIMILAR TO TH 16
NO LEDGE OBSERVED TO 84"
GROUNDWATER OBSERVED AT 66" - 0 HR
REDOX ?

PERCOLATION TEST
PERFORMED BY TOM METCALF
5/23/19

PT 1

BOTTOM @ 30", PRESOAK/DRY

TIME (min)	DEPTH (IN)	CHANGE DEPTH (IN)
7:30	10	
9:00	10 7/8	7/8
11:00	12 1/8	1 1/4
13:00	13 1/8	1
15:00	14	7/8
17:00	14 3/4	3/4
19:00	15 1/2	3/4
21:00	16 1/8	5/8
23:00	16 3/4	5/8
25:00	17 3/8	5/8
27:00	18	5/8
29:00	DRY	

PERCOLATION RATE = 3.2 MIN/IN

PT 2

BOTTOM @ 32", PRESOAK/DRY

TIME (min)	DEPTH (IN)	CHANGE DEPTH (IN)
0:30	10 5/8	
2:00	12 1/4	5/8
4:00	13 3/4	1 1/2
6:00	14 3/4	1
8:00	15 3/4	1
10:00	16 5/8	7/8
12:00	17 1/2	7/8
14:00	18 1/4	3/4
16:00	19	3/4
18:00	19 5/8	5/8
20:00	DRY	

PERCOLATION RATE = 3.2 MIN/IN

*H=24" (GST6224) GEOMATRIX GST LEACHING SYSTEM

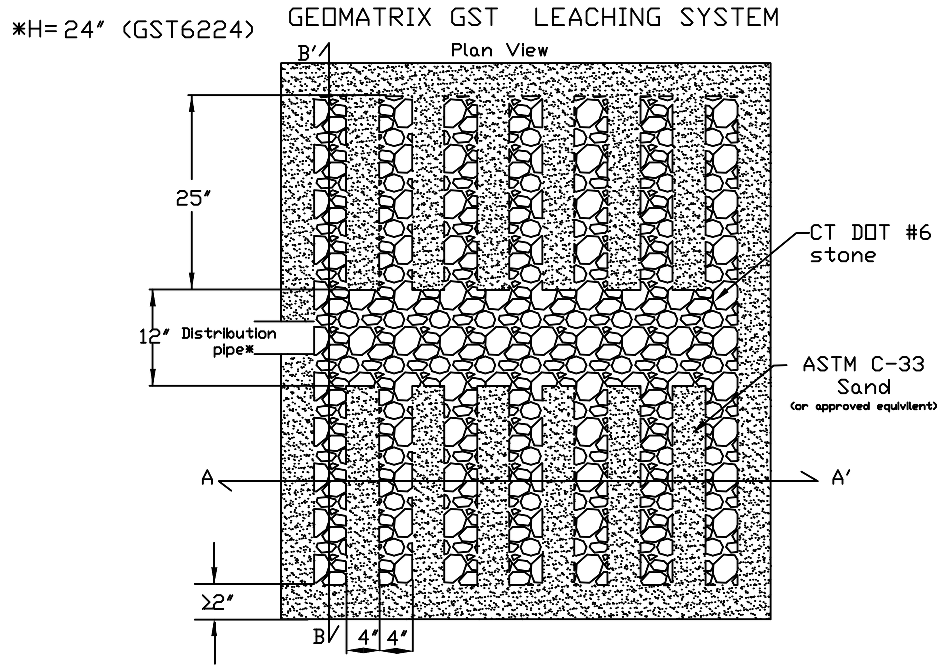

*3" min. I.D., ASTM D-3034, SDR 35 pipe for gravity applications
0.75" min. I.D., ASTM D-2665, SCH 40 PVC pipe for pressure applications

GEOMATRIX GST " LEACHING SYSTEM
B-B' CROSS SECTION

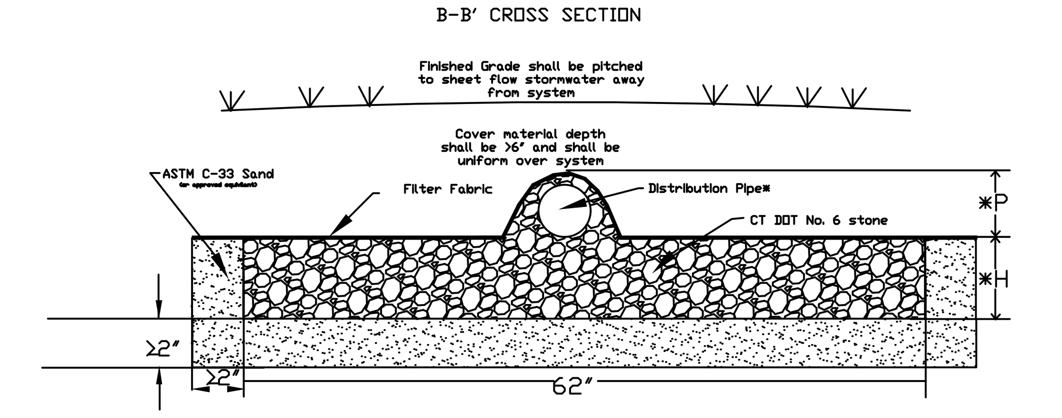

*H=24" (GST6224) *P= 2' - 5.5'
*3" min. I.D., ASTM D-3034, SDR 35 pipe for gravity applications
0.75" min. I.D., ASTM D-2665, SCH 40 PVC pipe for pressure applications

GEOMATRIX GST " LEACHING SYSTEM
A-A' CROSS SECTION

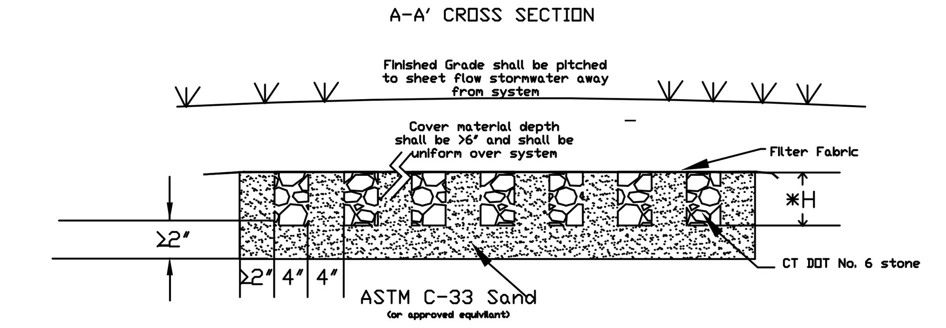

TO MY KNOWLEDGE AND BELIEF, THIS MAP IS SUBSTANTIALLY CORRECT AS NOTED HEREON.

ROBERT L. DOANE, JR.
CONN. P.E. & L.S. LIC. NO. 11463

STATE OF CONNECTICUT ROBERT L. DOANE, JR. NO. 11463 REGISTERED PROFESSIONAL ENGINEER
STATE OF CONNECTICUT ROBERT L. DOANE, JR. NO. 11463 LICENSED LAND SURVEYOR

"DETAIL SHEET"

DOANE ENGINEERING
CIVIL ENGINEERING AND LAND SURVEYING
P.O. BOX 113 CENTERBROOK, CONNECTICUT 06409
TEL: (860)767-0138, FAX: (860)767-9104

IMPROVEMENT LOCATION SURVEY
PREPARED FOR
LYCURGUS LLC
#97 OLD MIDDLESEX TURNPIKE, OLD SAYBROOK , CONNECTICUT

SCALE:	DATE:	SHEET NO.:	IDENT. NO.:
1"=20'	04/15/19	2 OF 2	

FILE:R:\DRAWINGS CLIENT\CLIENT DATABASE\TOWNS\OLD SAYBROOK\OLD MIDDLESEX TURNPIKE\DIBBLE-JAKE\DIBBLE-PUBLISH-SITE.DWG